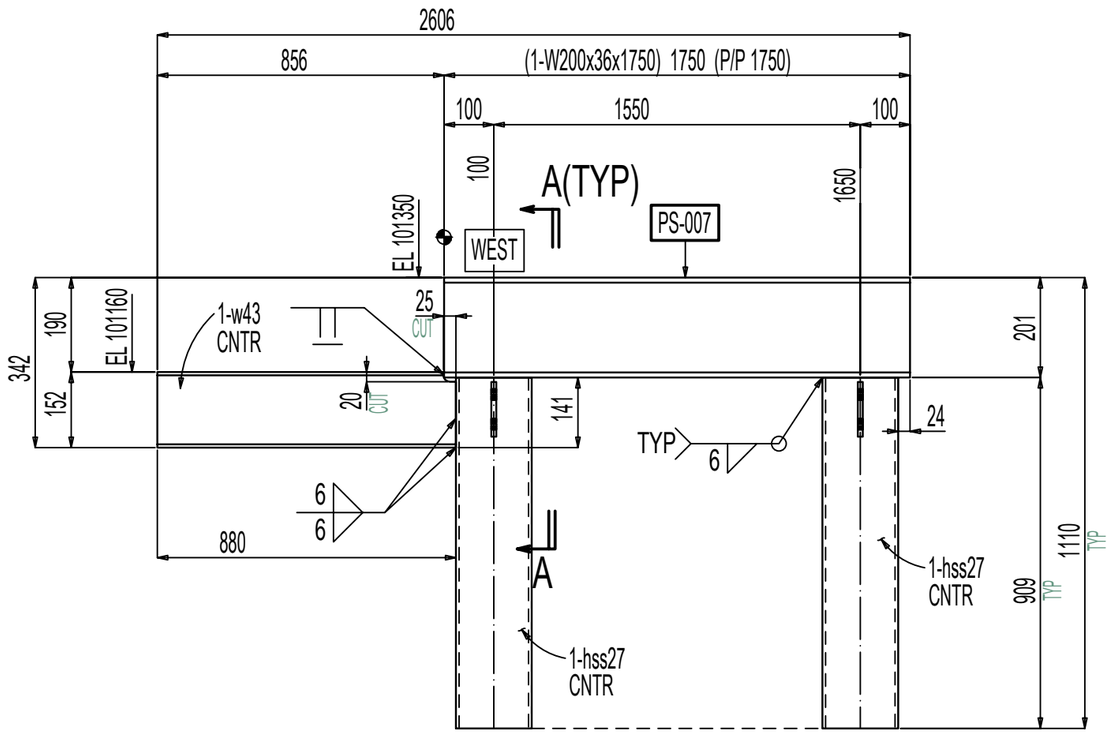

ONE PIPE SUPPORT PS-007

LOOKING NORTH

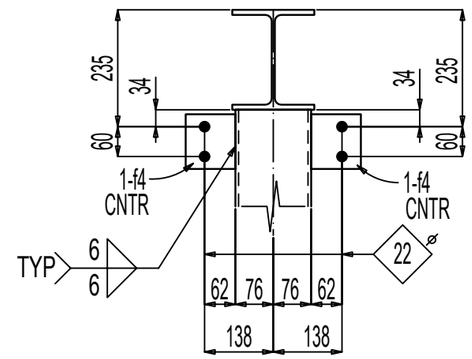

Section A-A

PS-007

BILL OF MATERIAL

Quantity Unit	Quantity Total	Steel Grade	Description	Piece Mark	Length	Weight Unit	Minor Mark	Sequence Numbers
	ONE		PIPE SUPPORT	PS-007				
1	1	350W	W200x36		1750	63	PS-007	
2	2	350W	HSS152x152x6.4		909	26	hss27	
4	4	300W	FL10x100		110	1	f4	
1	1	350W	W150x22		880	19	w43	

NOTE:

- ALL HOLES $^{13}/_{16}$" DIA. UNLESS NOTED OTHER WISE
- ALL BOLTS A325 $^{3}/_{4}$" DIA. UNLESS NOTED OTHERWISE